5001.700-GA.T001

X

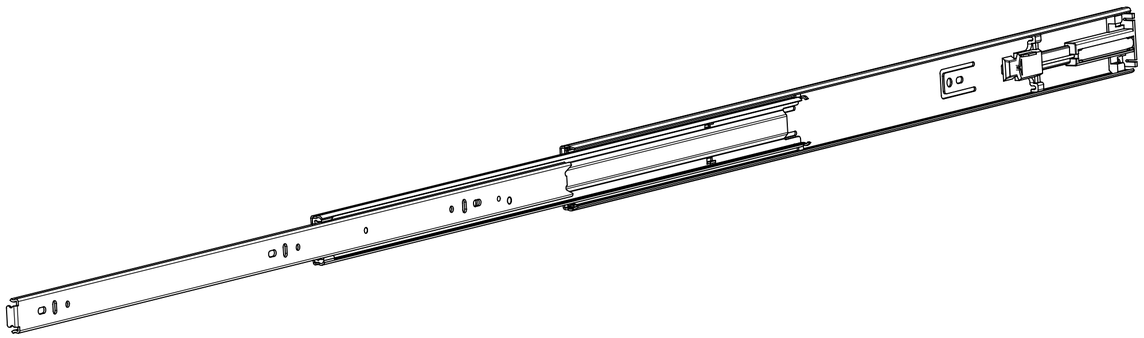

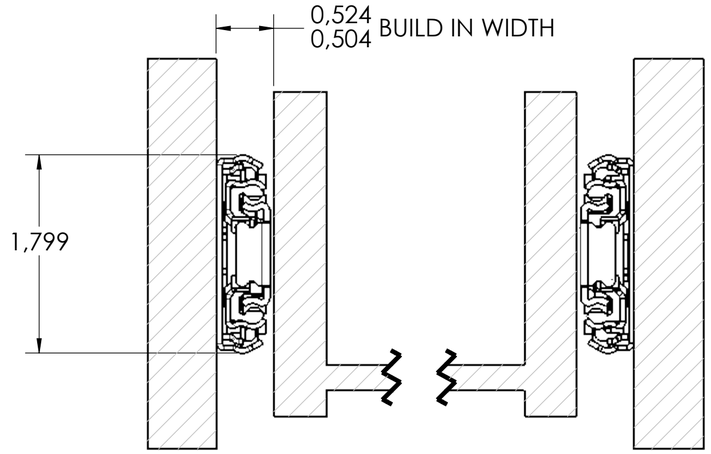

SCALE 1:1

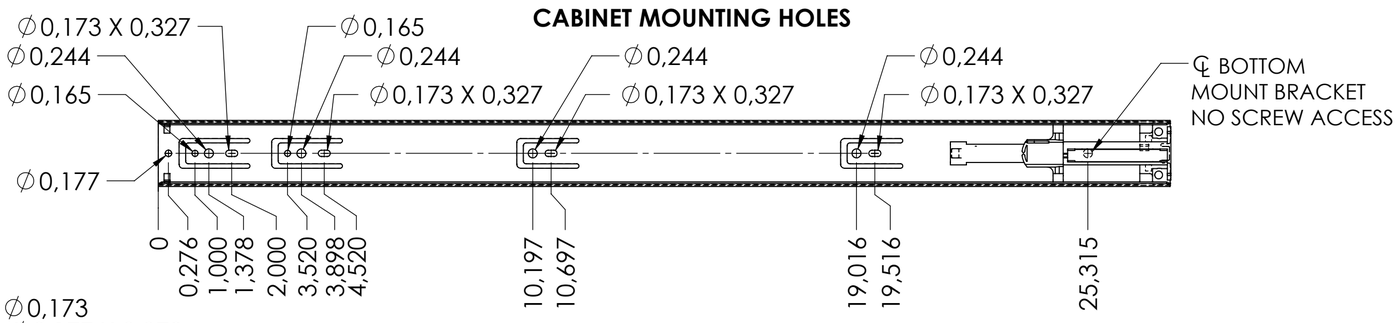

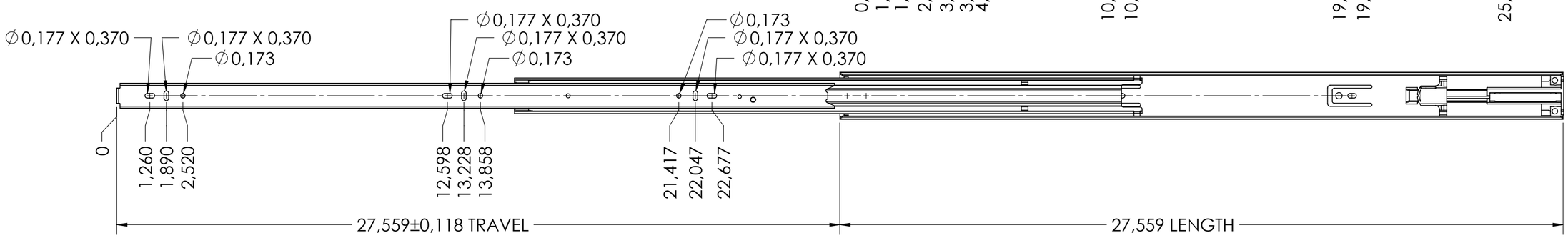

ECD SPRING FORCE: 19N ± 2N PER SLIDE

RECOMMENDED HARDWARE:

CABINET- 3.5MM SPAX M4 BUTTON HEAD OR #8 TRUSS HEAD SCREW

DRAWER- 3.5MM SPAX M4 BUTTON HEAD OR #8 TRUSS HEAD SCREW

general tolerances			missing dimensions see 3D = theor. intersection
ISO 2768-m			

This drawing remains our property and may not be multiplied neither be disclosed to third parties (§§1,3 and 5 from the copyright Act (UrhG))

covered according to DIN ISO 16016

ind.	changes	date	na.
k			
j			
i			
h			
g			
f			
e			
d			
c			
b			
a	0	00-00-0000	0

scale: 1:3

surface:

	date	name
drawn	29-10-2018	HB
proven	00-00-0000	00

Fulterer

Fulterer AG & Co KG
A-6890 Lustenau / Austria
Fulterer AG
CH-9430 St. Margrethen

material, semi finished parts: A2
STEEL
(technical requirements Fulterer)

description:
SIDE MOUNT FULL EXTENSION DRAWER SLIDE WITH SOFT-CLOSE & DRAWER DISCONNECT

drawing number:
5001.700-GA.T001

replaces version date:

Dienstag, 11. Oktober 2022 15:05:04 - markus.ropele