5002.650-GA.T015

X

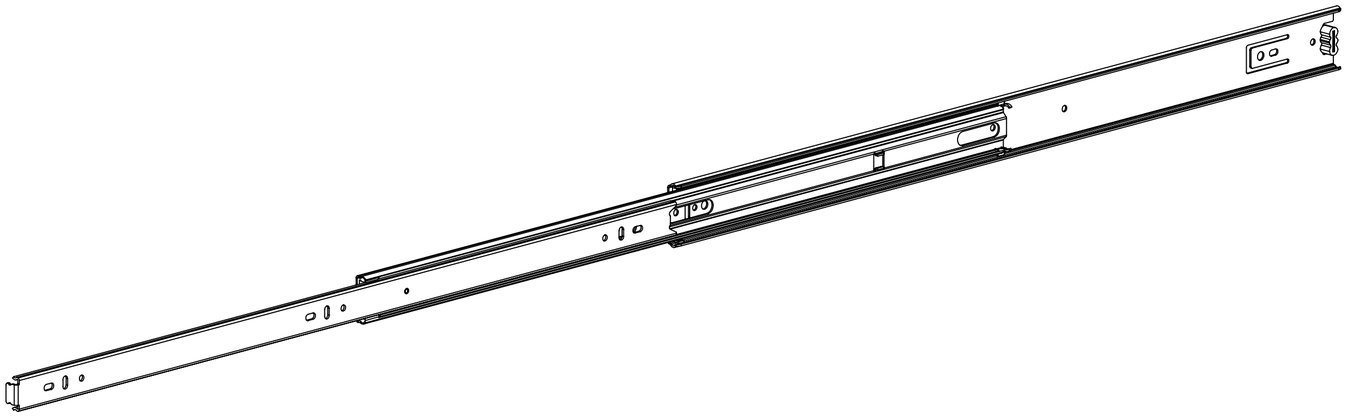

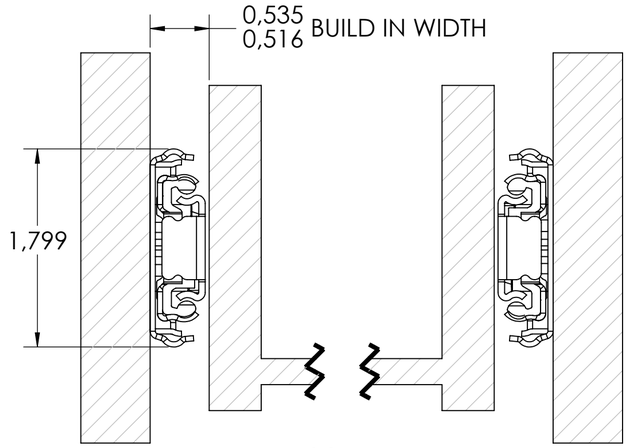

SCALE 1:1

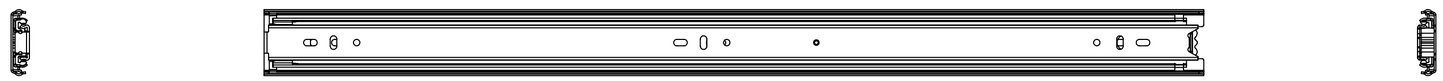

CABINET MOUNTING HOLES

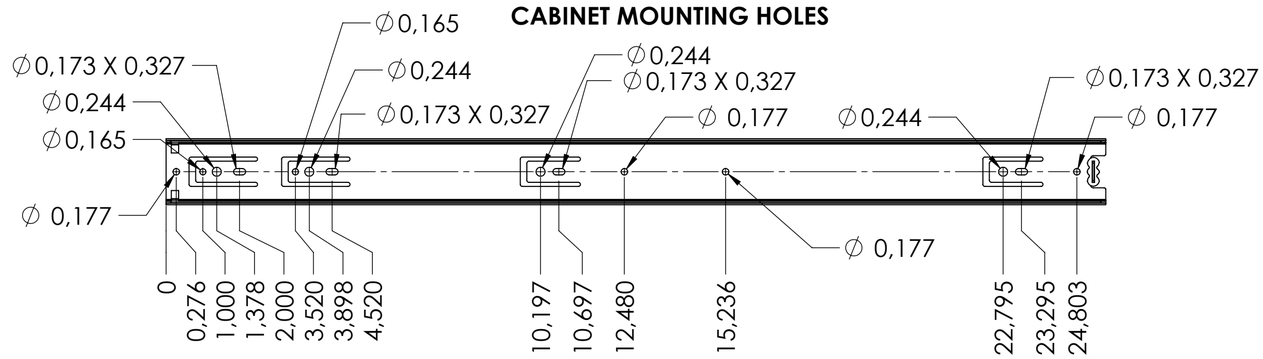

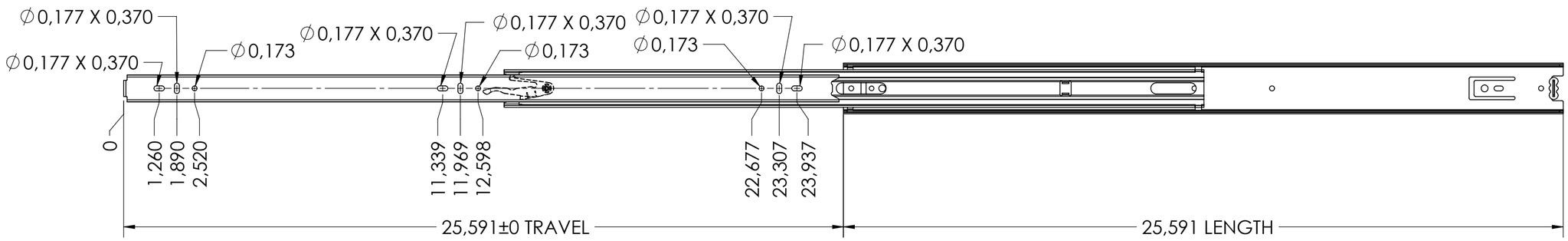

RECOMMENDED HARDWARE:

CABINET- SPAX 3.5mm M4 BUTTON HEAD OR #8 TRUSS HEAD SCREW

DRAWER- SPAX 3.5mm M4 BUTTON HEAD OR #8 TRUSS HEAD SCREW

general tolerances			missing dimensions see 3D = theor. intersection
IS0 2768-m			

This drawing remains our property and may not be multiplied neither be disclosed to third parties (§§1,3 and 5 from the copyright Act (UrhG))

covered according to DIN ISO 16016

ind.	changes	date	na.
k			
j			
i			
h			
g			
f			
e			
d			
c			
b			
a	0	00-00-0000	0

	date	name
drawn	12-10-2018	HB
proven	00-00-0000	00

scale: 1:31:3

surface:

material, semi finished parts: 304 STAINLESS STEEL (technical requirements Fulterer)

A2

description: STAINLESS STEEL SIDE MOUNT STAINLESS STEEL SIDE MOUNT FULL EXTENSION DRAWER SLIDE WITH DRAWER RELEASE

Fulterer

Fulterer AG & Co KG
A-6890 Lustenau / Austria

Fulterer AG
CH-9430 St. Margrethen

drawing number: 5002.650-GA.T015

replaces version date: