5400.60-GA.T018

X

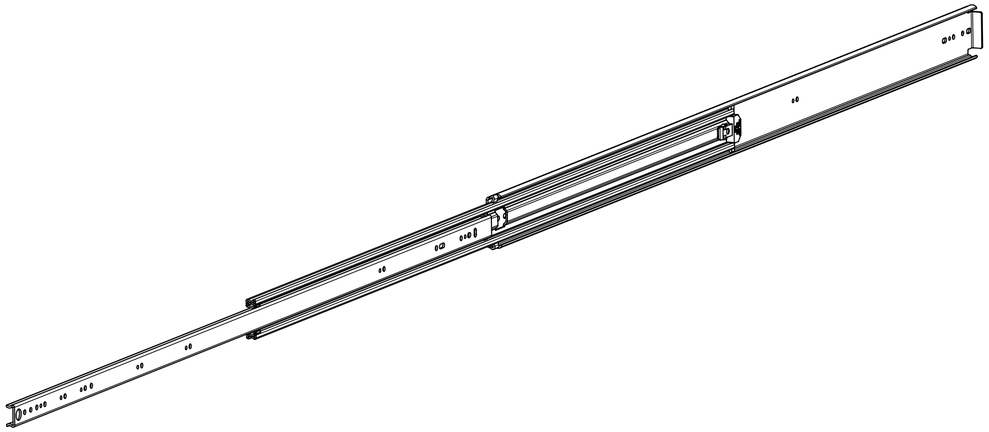

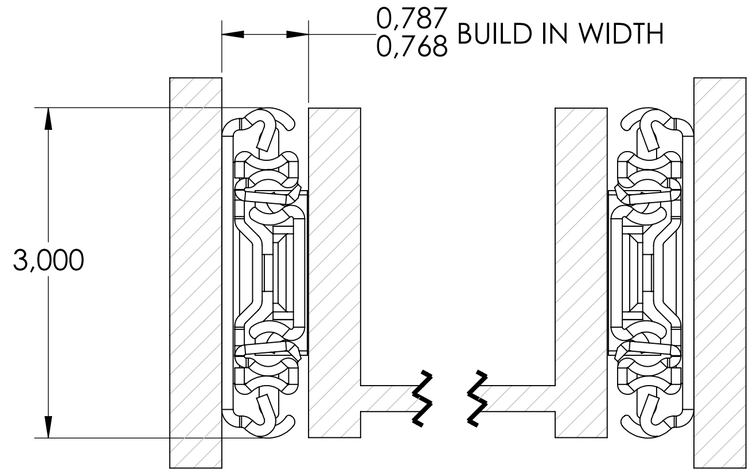

SCALE 1:1

CABINET MOUNTING HOLES

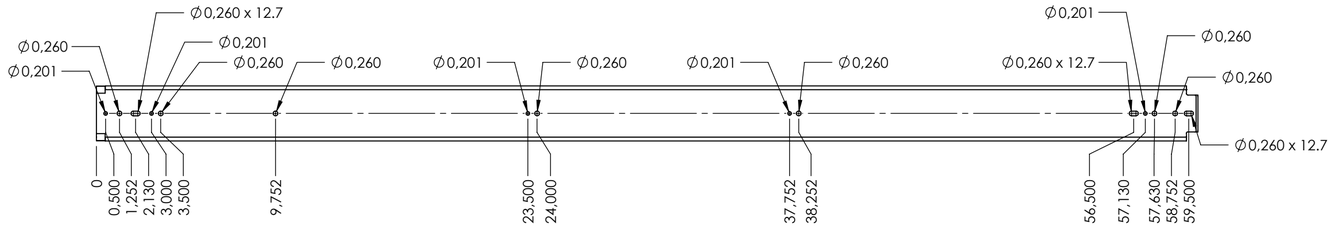

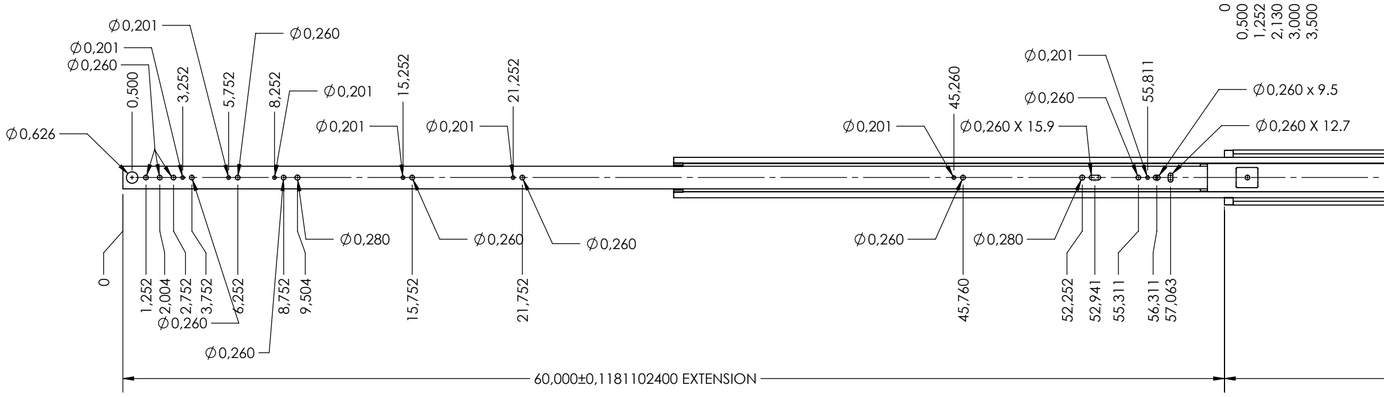

RECOMMENDED HARDWARE:

CABINET- M6 OR 1/4 BUTTON HEAD SCREWS

DRAWER- M6 OR 1/4 BUTTON HEAD SCREWS

general tolerances	DIN ISO 128-30
ISO 2768-m	missing dimensions see 3D = theor. intersection

This drawing remains our property and may not be multiplied neither be disclosed to third parties (§§1,3 and 5 from the copyright Act (UrhG))

covered according to DIN ISO 16016

ind.	changes	date	na.
k			
j			
i			
h			
g			
f			
e			
d			
c			
b			
a	UPDATE TITLE BLOCK	19-03-2019	HB

scale:	surface:
1:6	

	date	name
drawn	27-07-2018	HB
proven	00-00-0000	00

Fulterer

Fulterer AG & Co KG
A-6890 Lustenau / Austria

Fulterer AG
CH-9430 St. Margrethen

material, semi finished parts: A2
STEEL
(technical requirements Fulterer)

description:
FULL EXTENSION SIDE MOUNT
HEAVY DUTY DRAWER SLIDE
NON-DISCONNECT

drawing number:
5400.60-GA.T018

replaces version date: