Release to production .....

# 5046.400-GA.C001A

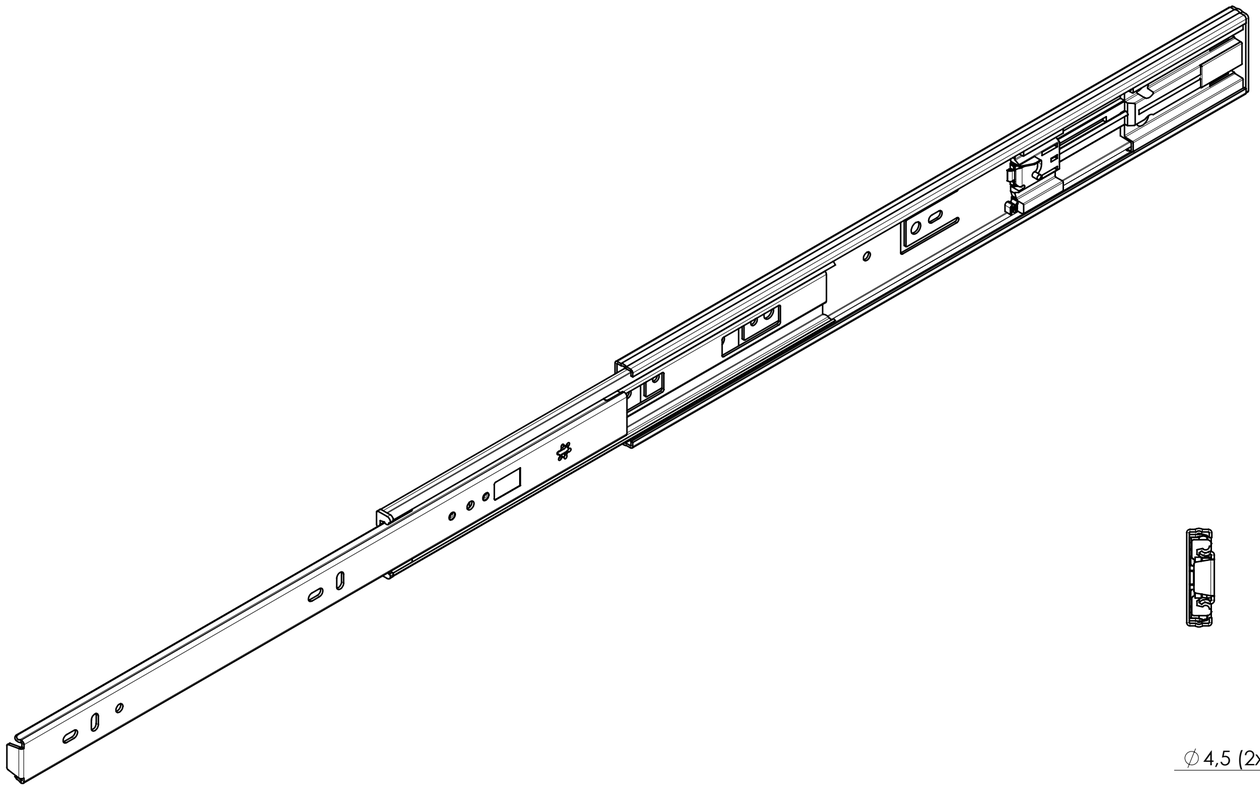

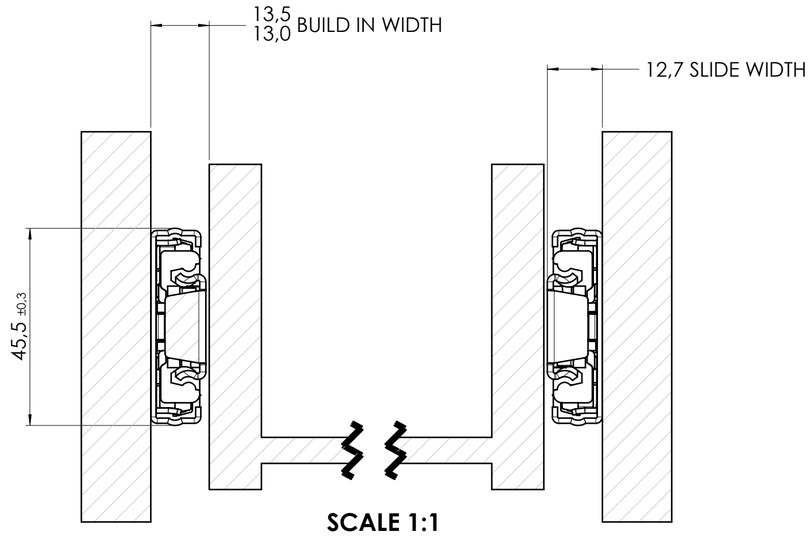


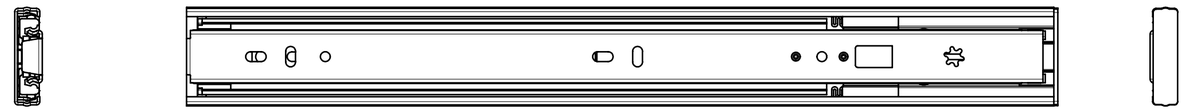

CABINET MOUNTING HOLES

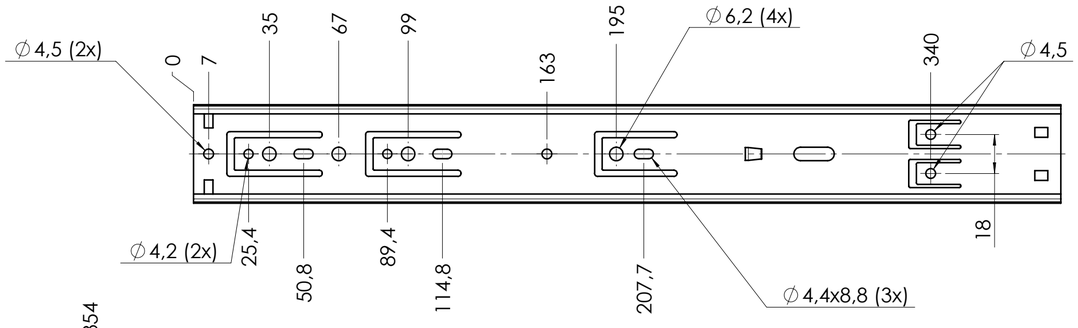


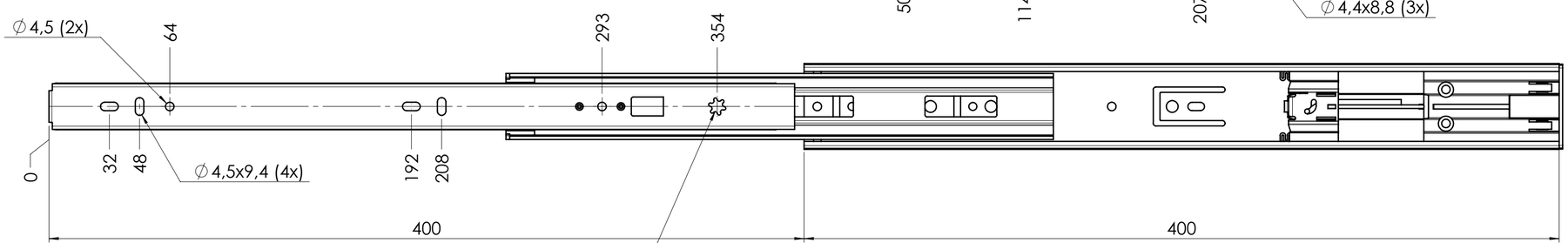


∅5,8 THRU ∨ OPPOSITE SIDE FOR FLAT HEAD SCREWS

RECOMMENDED HARDWARE:

CABINET- 3.5mm SPAX M4 BUTTON HEAD OR #8 TRUSS HEAD SCREW

DRAWER- 3.5mm SPAX M4 BUTTON HEAD OR #8 TRUSS HEAD SCREW

| general tolerances | | DIN ISO 128-30 |
|---|---|---|
| stamping part according Fulterer W18-001 | plastic part according DIN ISO 16742 TG4 | missing dimensions see 3D = theor. intersection |

This drawing remains our property and may not be multiplied neither be disclosed to third parties (§§1,3 and 5 from the copyright Act (UrhG))

covered according to DIN ISO 16016

| ind. | changes | date | na. |
|---|---|---|---|
| k | | | |
| j | | | |
| i | | | |
| h | | | |
| g | | | |
| f | | | |
| e | | | |
| d | | | |
| c | | | |
| b | | | |
| a | Lochposition angepasst | 16-04-2021 | MW |

| scale: | surface: |
|---|---|
| 1:2 | |

| | date | name |
|---|---|---|
| drawn | 09-12-2020 | MW |
| proven | 00-00-0000 | 00 |

Fulterer

**Fulterer AG & Co KG**
A-6890 Lustenau / Austria

**Fulterer AG**
CH-9430 St. Margrethen

material, semi finished parts: A2
STEEL
(technical requirements Fulterer)

description:
SIDE MOUNT FULL EXTENSION DRAWER SLIDE WITH SOFT-CLOSE & DRAWER DISCONNECT

drawing number:
5046.400-GA.C001A

replaces version date: