5210.650-GA.T031

X

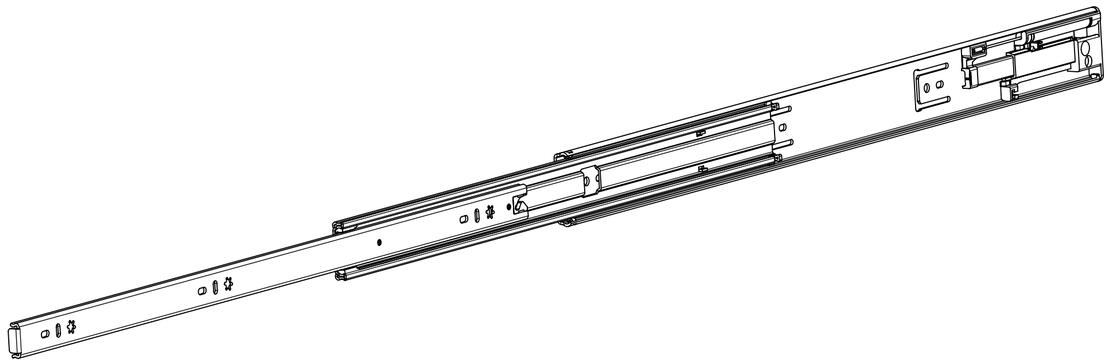

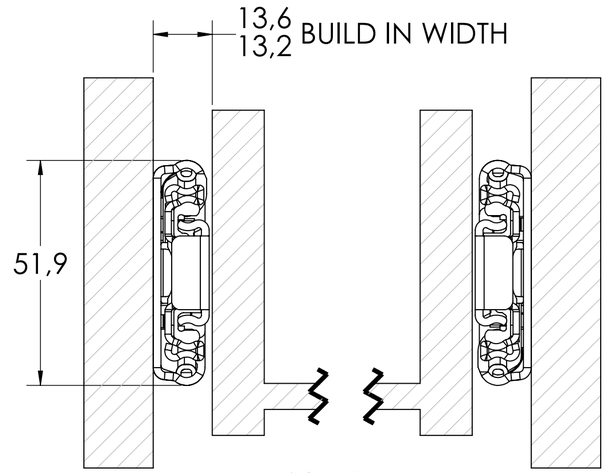

SCALE 1:1

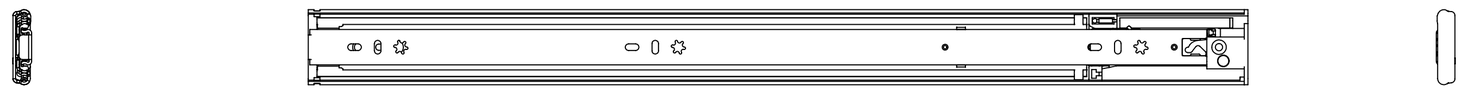

CABINET MOUNTING HOLES

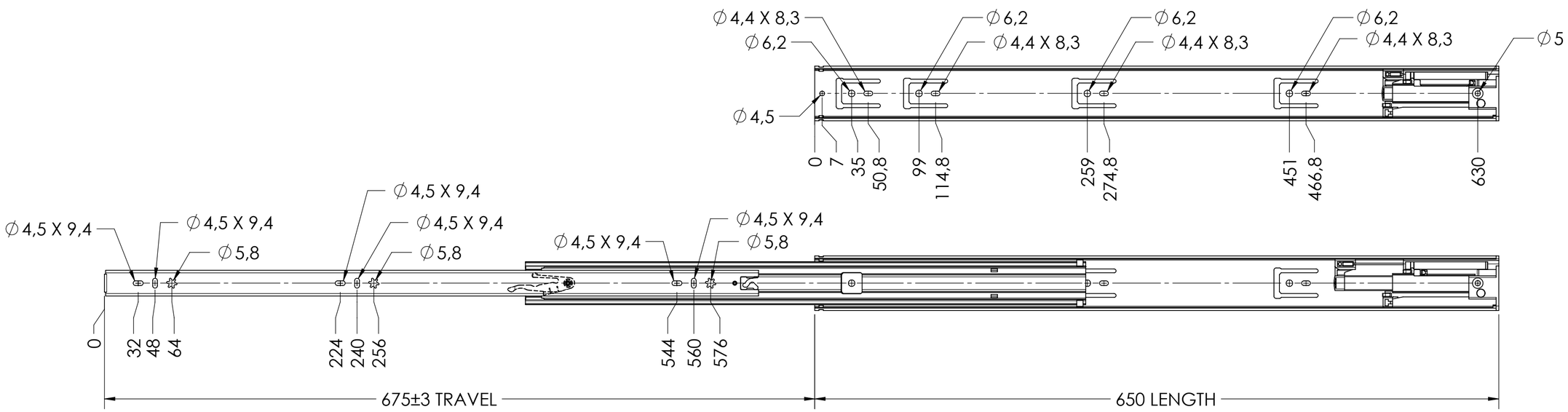

RECOMMENDED HARDWARE:

CABINET- M4 BUTTON HEAD M5 FLATHEAD #8 TRUSS HEAD #10 FLAT HEAD SCREW

DRAWER- M4 BUTTON HEAD M5 FLATHEAD #8 TRUSS HEAD #10 FLAT HEAD SCREW

general tolerances ISO 2768-m	DIN ISO 128-30 missing dimensions see 3D = theor. intersection

This drawing remains our property and may not be multiplied neither be disclosed to third parties (§§1,3 and 5 from the copyright Act (UrhG))

covered according to DIN ISO 16016

ind.	changes	date	na.
k			
j			
i			
h			
g			
f			
e			
d			
c			
b			
a	0	00-00-0000	0

scale:	surface:
1:3	

	date	name
drawn	14-02-2019	HB
proven	00-00-0000	00

Fulterer

Fulterer AG & Co KG
A-6890 Lustenau / Austria
Fulterer AG
CH-9430 St. Margrethen

material, semi finished parts: A2
STEEL
(technical requirements Fulterer)

description:
SIDE MOUNT OVER EXTENSION DRAWER SLIDE WITH SOFT CLOSE & DRAWER DISCONNECT

drawing number:
5210.650-GA.T031

replaces version date: