5001.355-GA.T049

X

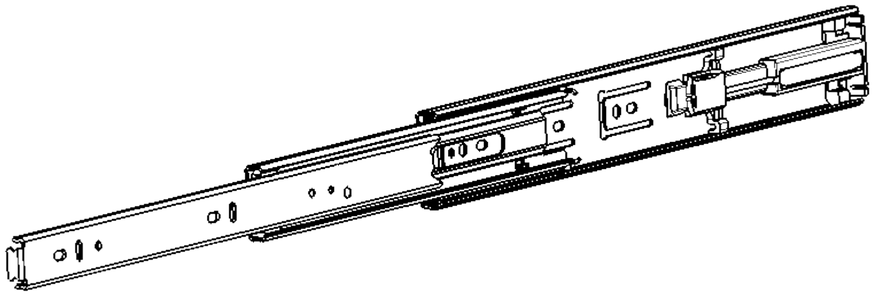

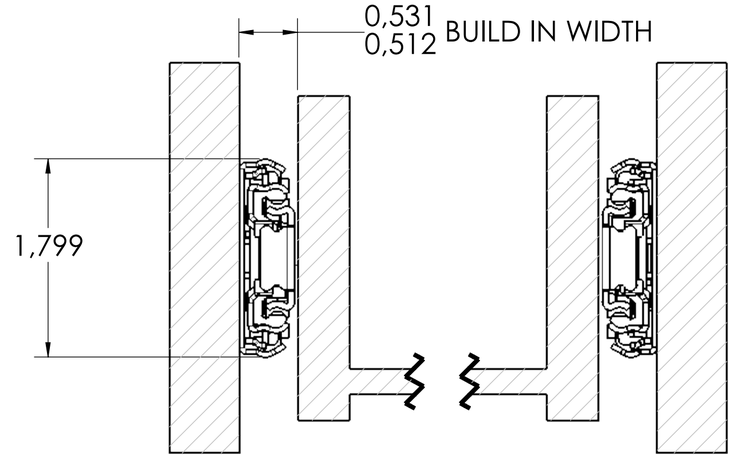

SCALE 1:1

CABINET MOUNTING HOLES

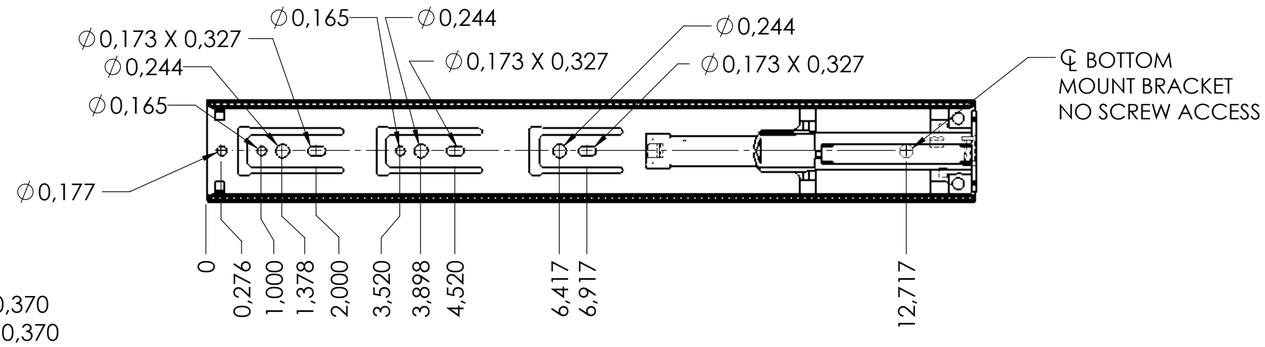

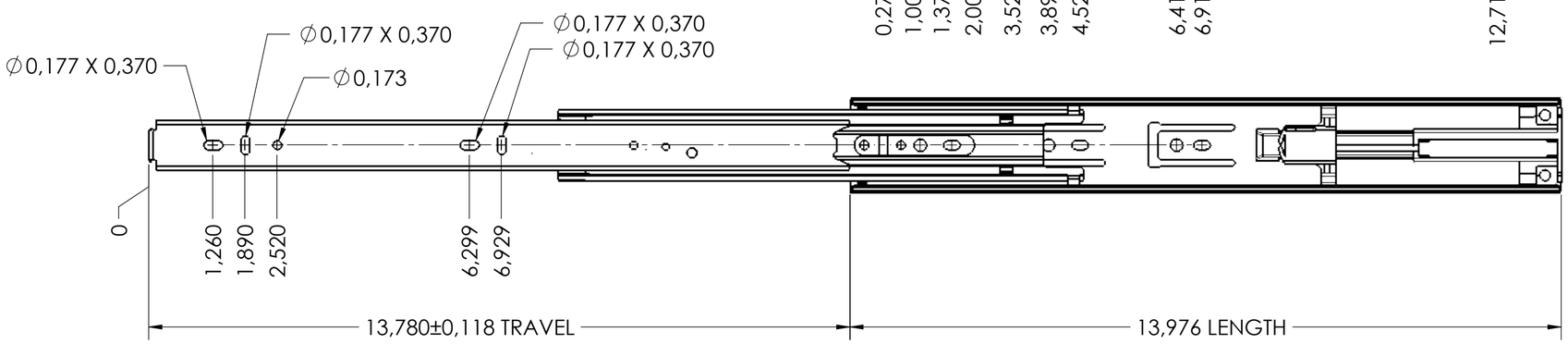

ECD SPRING FORCE: 16N ± 2N PER SLIDE

RECOMMENDED HARDWARE:

CABINET- 3.5MM SPAX M4 BUTTON HEAD OR #8 TRUSS HEAD SCREW

DRAWER- 3.5MM SPAX M4 BUTTON HEAD OR #8 TRUSS HEAD SCREW

general tolerances			DIN ISO 128-30
ISO 2768-m			missing dimensions see 3D
			= theor. intersection

This drawing remains our property and may not be multiplied neither be disclosed to third parties (§§1,3 and 5 from the copyright Act (UrhG))

covered according to DIN ISO 16016

ind.	changes	date	na.
k			
j			
i			
h			
g			
f			
e			
d			
c			
b			
a	0	00-00-0000	0

scale:	surface:
1:2	

	date	name
drawn	16-05-2019	HB
proven	00-00-0000	00

Fulterer

Fulterer AG & Co KG
A-6890 Lustenau / Austria
Fulterer AG
CH-9430 St. Margrethen

material, semi finished parts: A2
STAINLESS STEEL
(technical requirements Fulterer)

description:
SIDE MOUNT FULL EXTENSION
DRAWER SLIDE WITH SOFT
CLOSE & DRAWER DISCONNECT

drawing number:
5001.355-GA.T049

replaces version date: