5045.550-GA.C030A

X

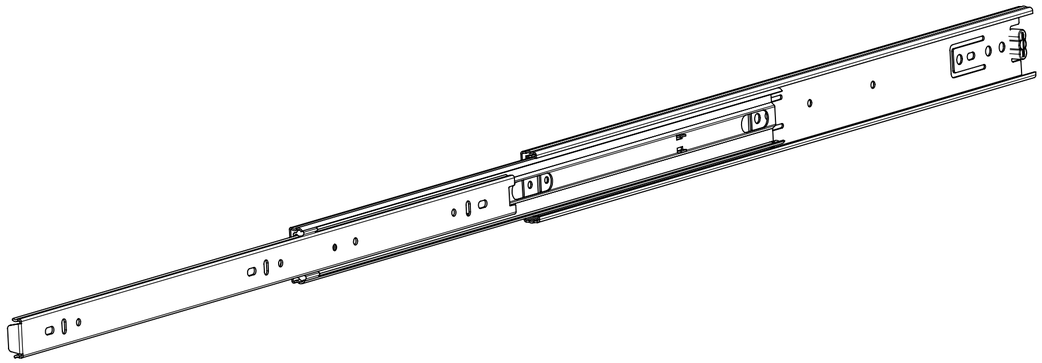

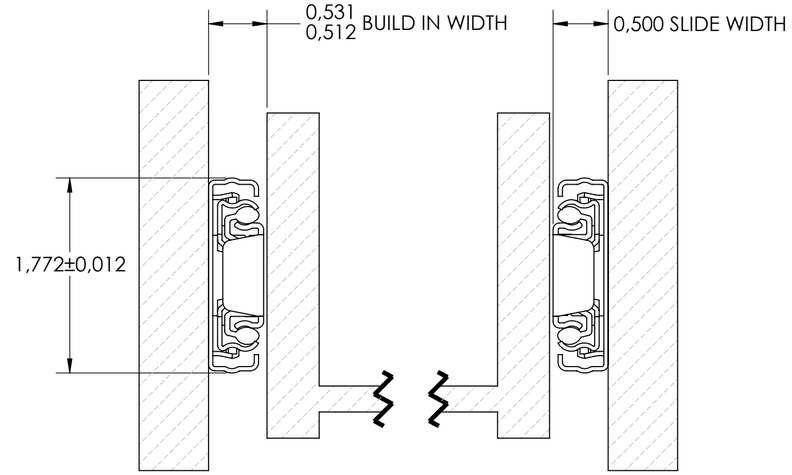

SCALE 1:1

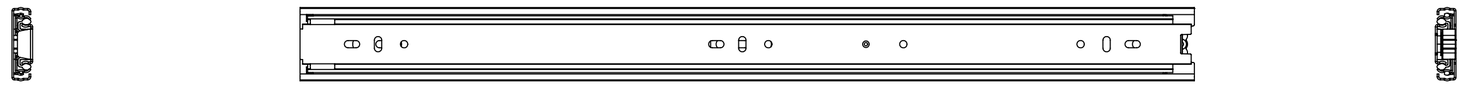

CABINET MOUNTING HOLES

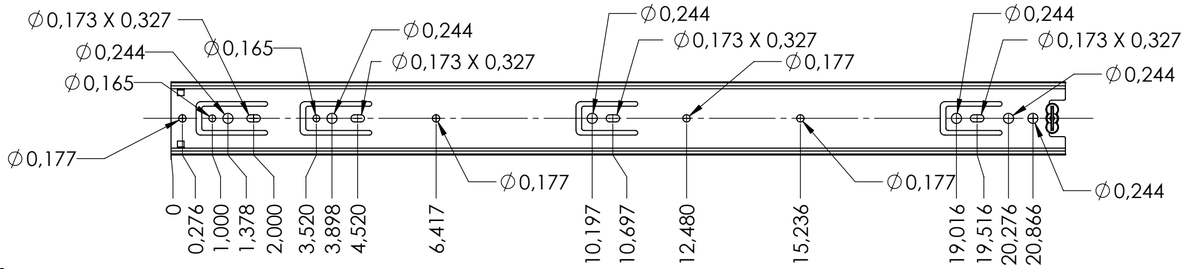

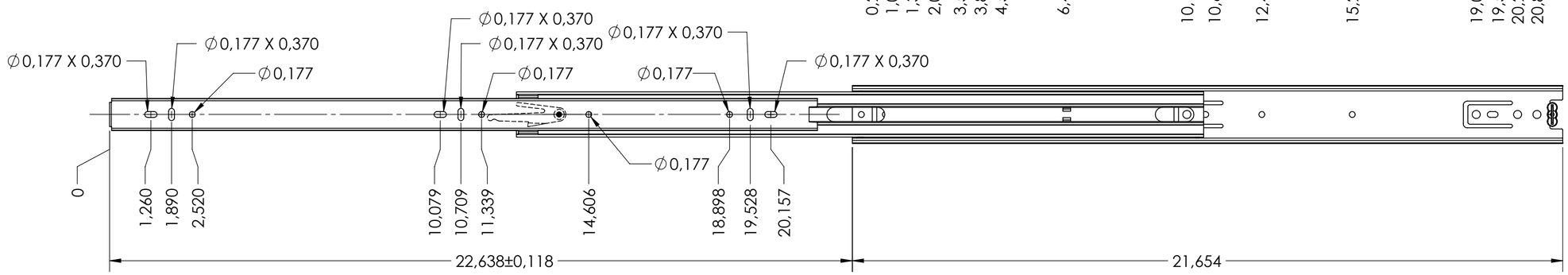

RECOMMENDED HARDWARE:

CABINET- 3.5mm SPAX M4 BUTTON HEAD OR #8 TRUSS HEAD SCREW

DRAWER- 3.5mm SPAX M4 BUTTON HEAD OR #8 TRUSS HEAD SCREW

general tolerances ISO 2768-m	DIN ISO 128-30 missing dimensions see 3D = theor. intersection

This drawing remains our property and may not be multiplied neither be disclosed to third parties (§§1,3 and 5 from the copyright Act (UrhG))

covered according to DIN ISO 16016

ind.	changes	date	na.
k			
j			
i			
h			
g			
f			
e			
d			
c			
b			
a	0	00-00-0000	00

scale: 3:8

surface:

	date	name
drawn	03-09-2020	CS
proven	00-00-0000	00

Fulterer

Fulterer AG & Co KG
A-6890 Lustenau / Austria
Fulterer AG
CH-9430 St. Margrethen

material, semi finished parts: A2
STEEL
(technical requirements Fulterer)

description:
SIDE MOUNT OVER EXTENSION SLIDE WITH DRAWER DISCONNECT

drawing number:
5045.550-GA.C030A

replaces version date: