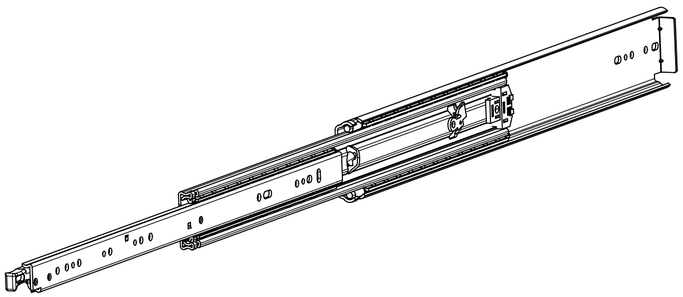

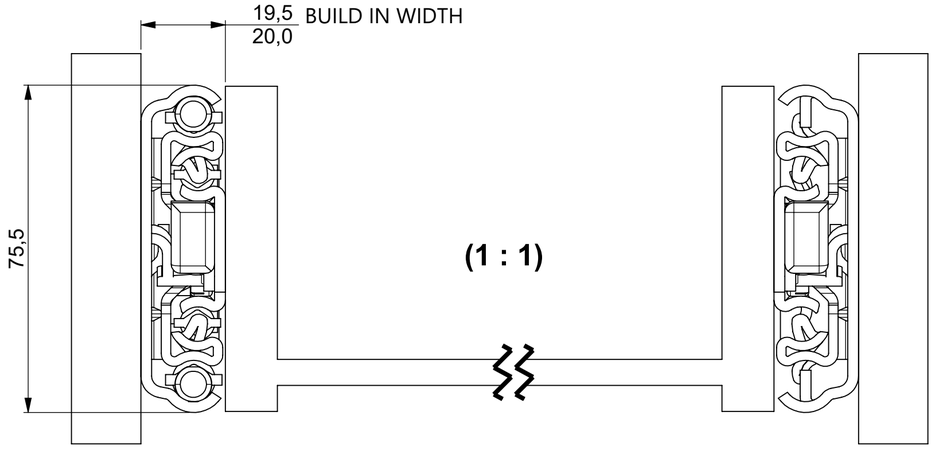

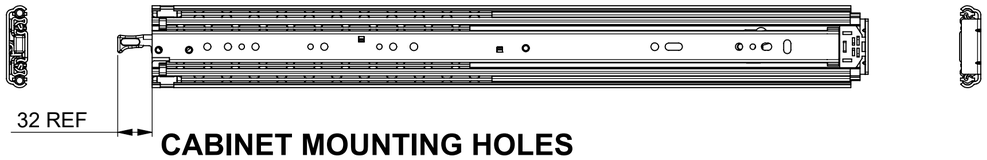

CABINET MOUNTING HOLES

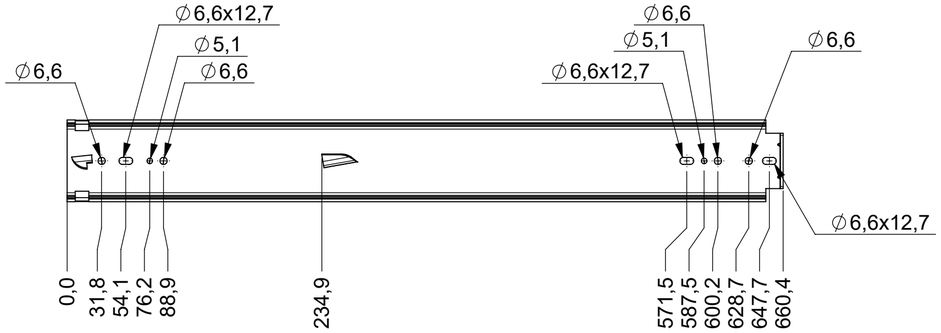

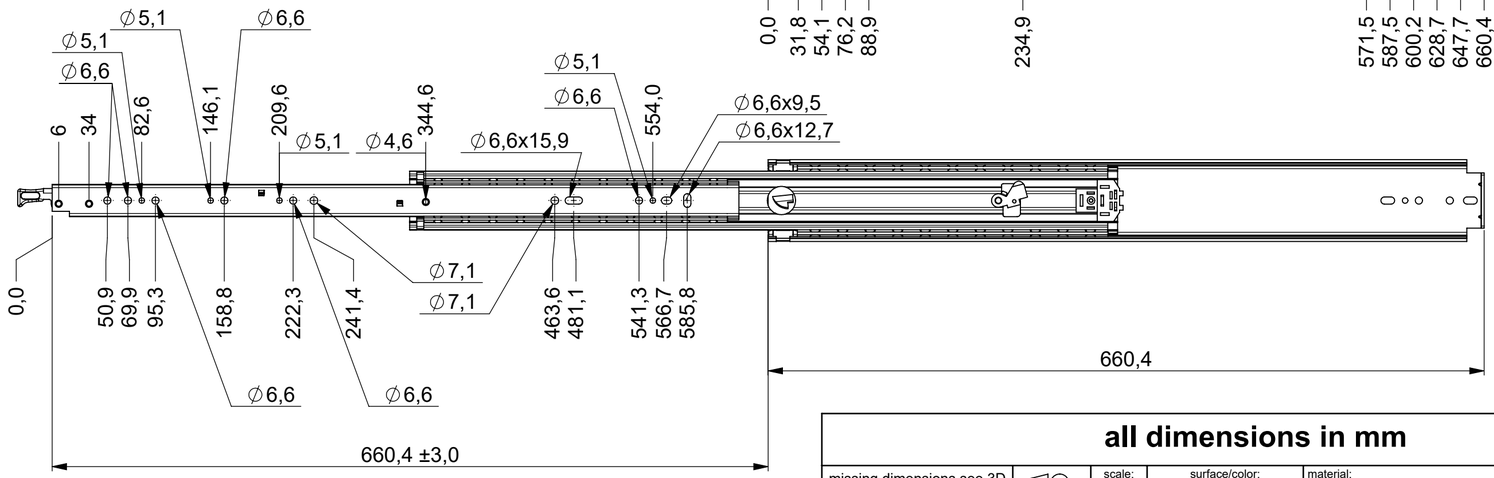

RECOMMENDED HARDWARE:

CABINET - M6 OR 1/4 BUTTON HEAD SCREWS

DRAWER - M6 OR 1/4 BUTTON HEAD SCREWS

all dimensions in mm

missing dimensions see 3D = theor. intersection	DIN ISO 128-30	scale: **1:4**	surface/color: **Zinc plated**	material: (technical requirements Fulterer) **STEEL**
released			drawn **2025-01-30** **PH** proven **2025-02-27** **BM**	description: **FULL EXTENSION SIDE MOUNT** heavy duty spring lock-in/lock-out non-disconnect slide
ind.	changes	date	name	

Fulterer

Fulterer AG & Co KG
A-6890 Lustenau

Fulterer AG
CH-9430 St. Margrethen

drawing number:
5401.26-GA.C054D

replaces the edition:

A2

This drawing remains our property and may not be multiplied neither be disclosed to third parties (§§1,3 and 5 from the copyright Act (UrhG)).

covered according to DIN ISO 16016