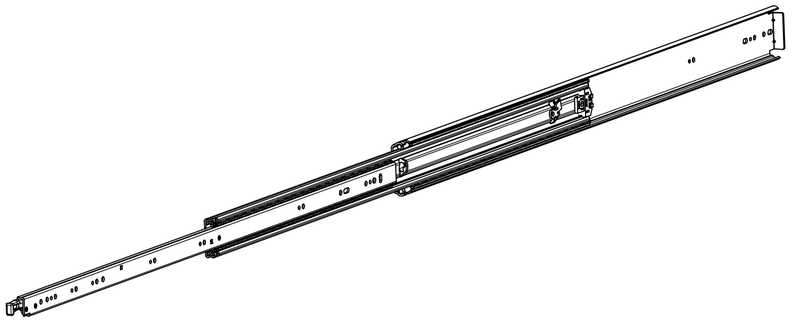

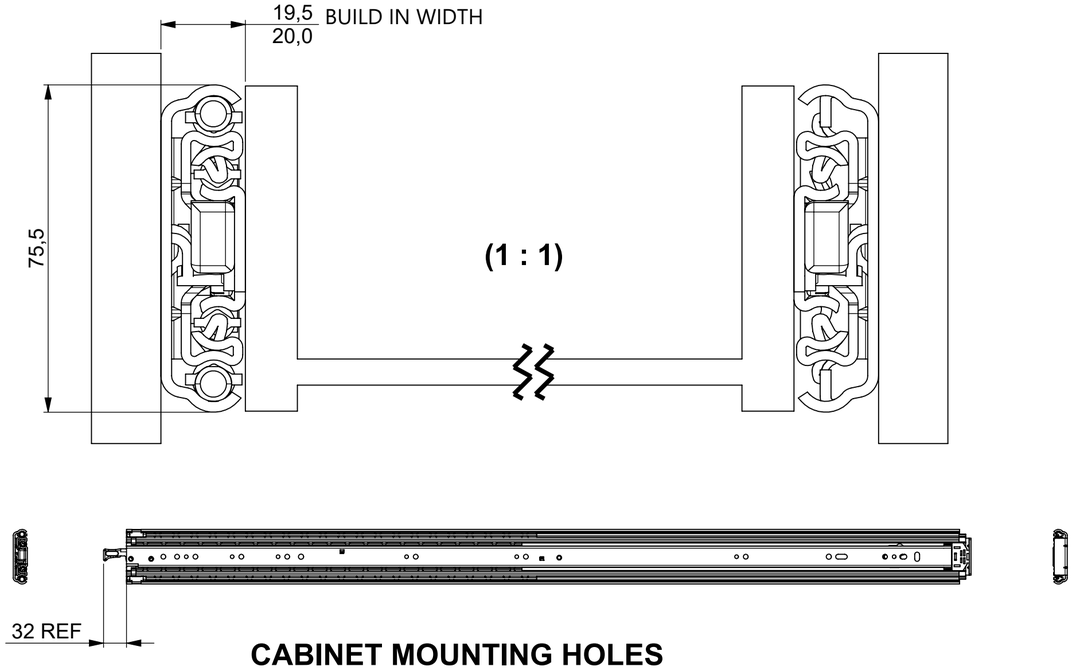


## CABINET MOUNTING HOLES

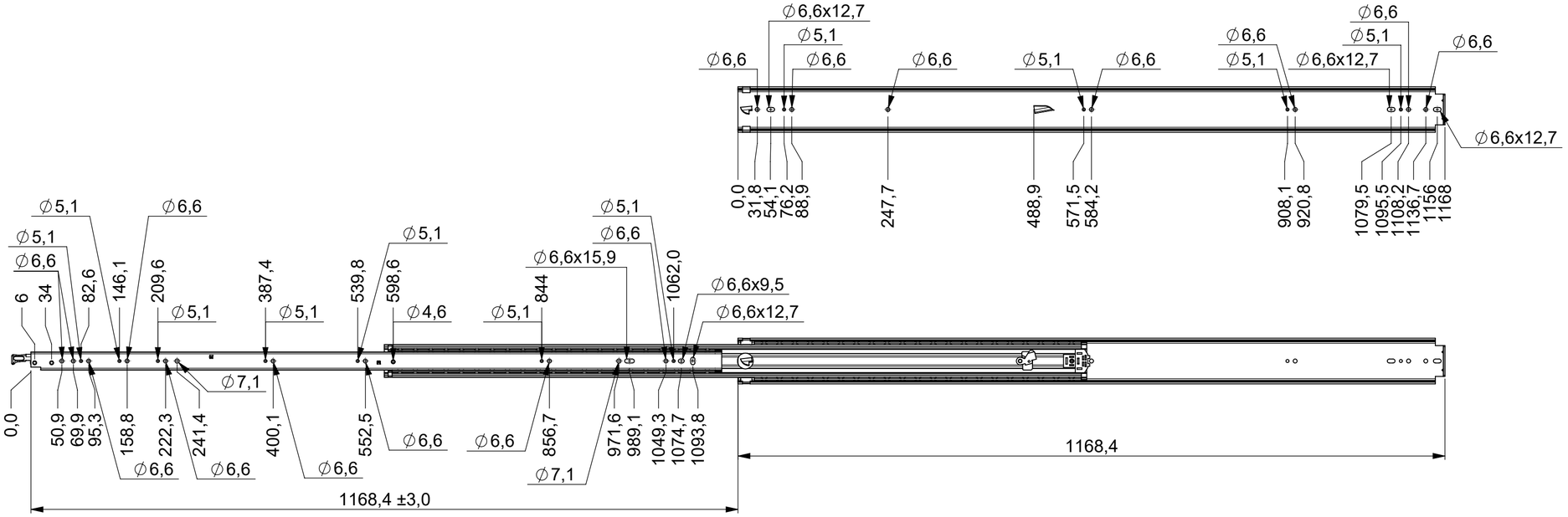


**RECOMMENDED HARDWARE:**
**CABINET - M6 OR 1/4 BUTTON HEAD SCREWS**

**DRAWER - M6 OR 1/4 BUTTON HEAD SCREWS**

**all dimensions in mm**

| | | | | |
|---|---|---|---|---|
| missing dimensions see 3D<br>⌭ = theor. intersection | DIN ISO 128-30 | scale: **1:6** | surface/color: **Zinc plated** | material: **STEEL** (technical requirements Fulterer) |
| **released** | | | | description: **FULL EXTENSION SIDE MOUNT** heavy duty spring lock-in/lock-out non-disconnect slide |

| | date | name |
|---|---|---|
| drawn | 2025-01-30 | PH |
| proven | 2025-02-27 | BM |

| ind. | changes | date | name |
|---|---|---|---|
| | | | |

Fulterer

**Fulterer AG & Co KG**
A-6890 Lustenau

**Fulterer AG**
CH-9430 St. Margrethen

drawing number: 5401.46-GA.C054D

replaces the edition:

**A2**

This drawing remains our property and may not be multiplied neither be disclosed to third parties (§§1,3 and 5 from the copyright Act (UrhG)).

covered according to DIN ISO 16016