Release to production .....

5047.700-GA.T000

X

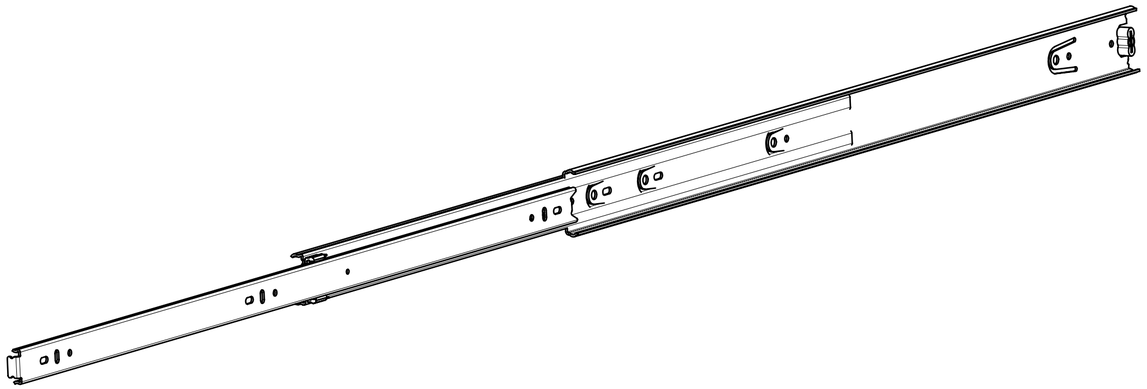

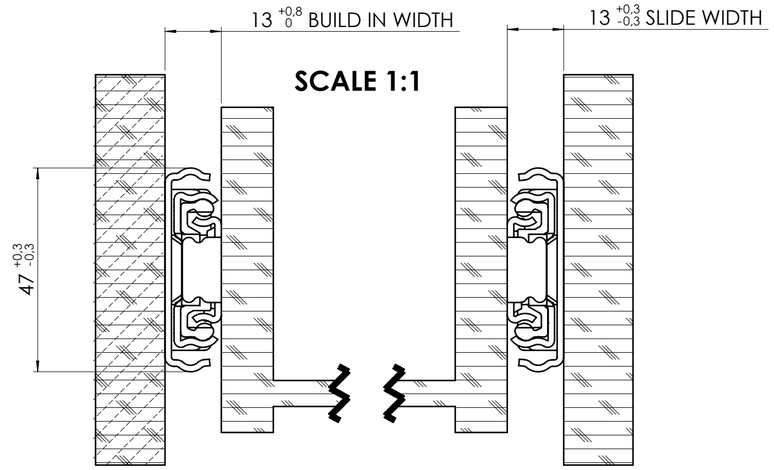

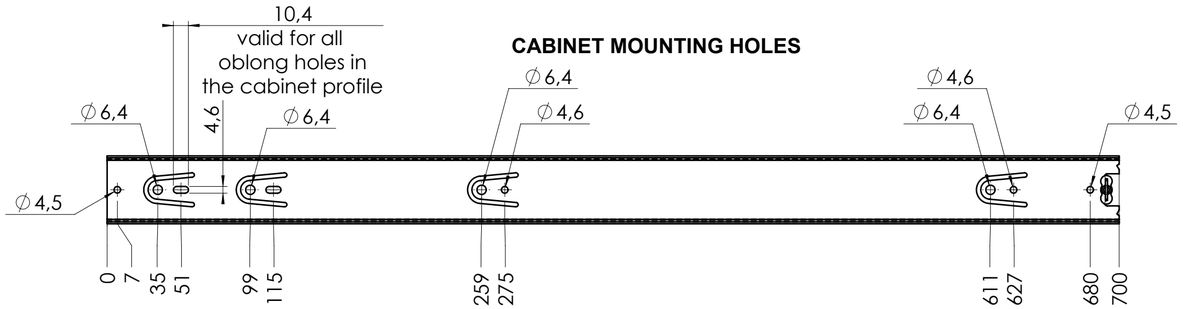

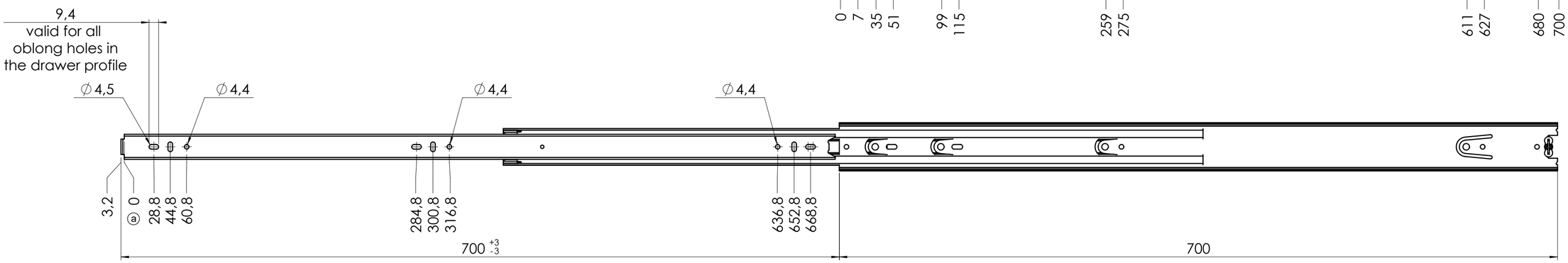

RECOMMENDED HARDWARE:
CABINET- 3.5mm SPAX M4 BUTTON HEAD OR #8 TRUSS HEAD SCREW

DRAWER- 3.5mm SPAX M4 BUTTON HEAD OR #8 TRUSS HEAD SCREW

all dimensions in mm

DIN ISO 128-30
missing dimensions see 3D
= theor. intersection

This drawing remains our property and may not be multiplied neither be disclosed to third parties (§§1,3 and 5 from the copyright Act (UrhG))

covered according to DIN ISO 16016

ind.	changes	date	na.
ⓐ	Anp. aktuelle Vorlage	07-03-2023	BM

scale: 1:3	surface:	
	date	name
drawn	05-05-2022	CS
proven	00-00-0000	00

Fulterer

Fulterer AG & Co KG
A-6890 Lustenau / Austria
Fulterer AG
CH-9430 St. Margrethen

material, semi finished parts: A2
STEEL
(technical requirements Fulterer)

description:
FR 5047 / 70 EN (mm)
SIDE MOUNT FULL EXTENSION
STANDARD MOUNTING HOLE
DRAWER DISCONNECT

drawing number:
5047.700-GA.T000

replaces version date:

Mittwoch, 22. März 2023 15:07:46 pc