CS# 791.600-GA.L103

drawn left (right mirrorimage)

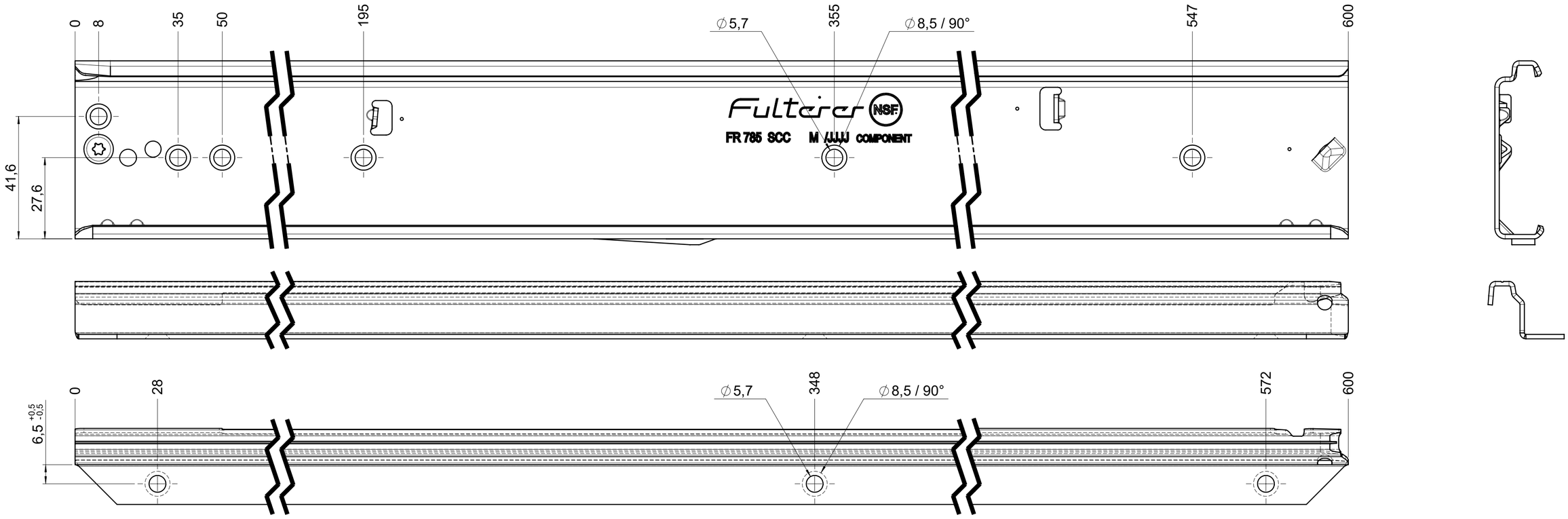

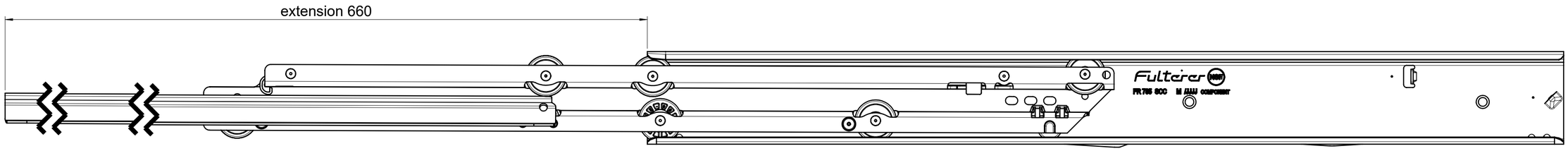

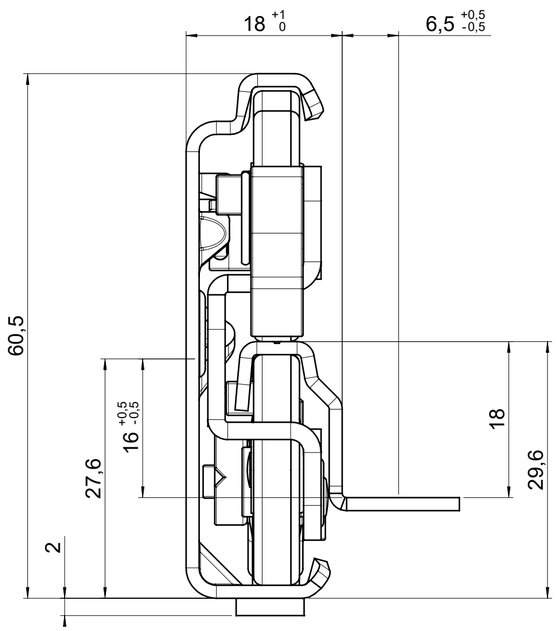

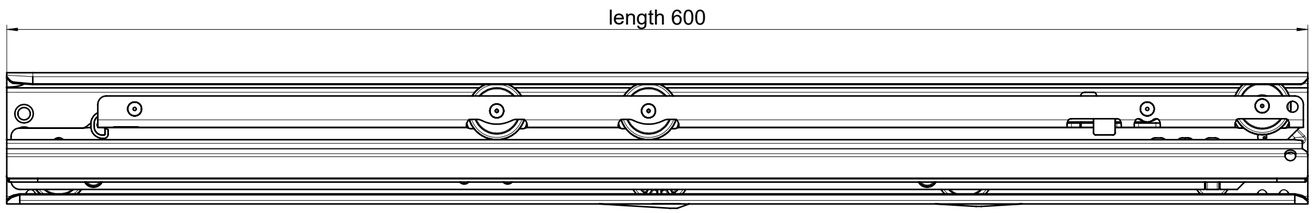

final approval

customer name:

signed by:

date:

all dimensions in mm

DIN ISO 128-30
missing dimensions see 3D
= theor. intersection

This drawing remains our property and may not be multiplied neither be disclosed to third parties (§§1,3 and 5 from the copyright Act (UrhG))

covered according to DIN ISO 16016

ind.	changes	date	na.
k			
j			
i			
h			
g			
f			
e			
d			
c			
b			
a			

scale: 1:1
surface:

	date	name
drawn	24-04-2023	FM
proven	24-04-2023	pr

Fulterer

Fulterer AG & Co KG
A-6890 Lustenau / Austria
Fulterer AG
CH-9430 St. Margrethen

material, semi finished parts: A2
CS
(technical requirements Fulterer)

description:
FR 791 / 60 CS EN (mm)
progressive-action over-extension
drawerslide / bottom mount

drawing number:
CS# 791.600-GA.L103

replaces version date:

Montag, 24. April 2023 13:49:35 michelle.freiberger